小型真空抽氣系統
電子報

Are you looking for a perfect vacuum solution?
Please contact us:

業務經理 張冠迪
中英友科技有限公司

August,16,2013

小型真空抽氣系統

Mechanical booster + Rotary vant pump

乾式魯式幫浦 +油迴轉式幫浦

完整真空方案的提供者

最佳應用服務的整合者

中英友科技有限公司

http://www.ptpump.com.tw

真空產業相關問題，
“知識”*詢問窗口*

- 請麻煩您至中英友科技公司網址，提出相關問題詢問,
- 我們的專業技術團隊，將會盡快回覆您的知識需求。

Roots幫浦＆RP幫浦抽氣系統-知識Q&A

- **Q:真空抽氣系統(PUMPING SYSTEM)—學術單位常見之小型真空系統(Roots pump+Rotary pump)品牌與規格爲何?**

Answer：Alcate l(法國) Roots vacuum pump

RSV301 B Roots pump

Alcatel (法國) Rotary vane pump

PASCAL Series 2063SD pump

With full range vacuum gauge

With pump frame modul

Roots幫浦＆RP幫浦抽氣系統-知識Q&A

Alcatel Roots pumping system Specifications :

2063 SD / RSV 301B Roots Pumping System
-Nominal pumping speed : 360 m^3/h
-Ultimate total pressure : 2 x 10 –4 mbar
-Max. continuous inlet pressure : 1000 mbar
-Inlet / Outlet flange : ISO DN 63 / DN 40
-Motor power : RSV 301B/ 1.1Kw, 2063 C2/ 2.6 Kw
-Oil capacity : RSV 301B/ 0.7 liters, 2063 C2/ 7 liters
-Weight : RSV 301B/ 88 kg, 2063 SD/ 98 kg
-220/380V, 60HZ, 3PH

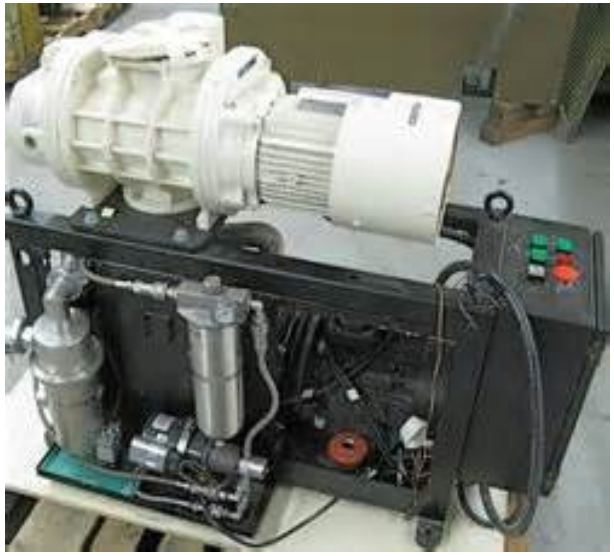

Alcatel 2063SD PUMP

Alcatel 2063SD+ 301B PUMP+ FRAME

Alcatel 301B ROOTS PUMP

Roots幫浦＆RP幫浦抽氣系統-知識Q&A

Q:真空抽氣系統(PUMPING SYSTEM)—同步輻射研究中心(SRRC)常見之小型高真空抽氣系統(Dry pumping system)品牌與規格為何?

Answer:

Alcate I(法國)

Drytel 1025 Compact pumping system

Drytel 1025 with MDP 5011 & AMD1

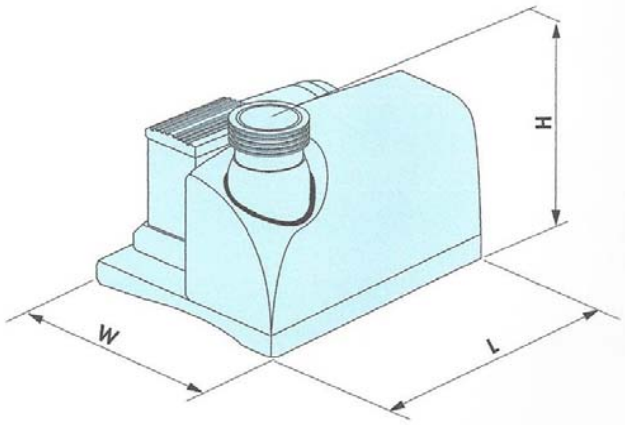

Roots幫浦 & RP幫浦抽氣系統–知識Q&A

Drytel 1025: technical data

			MDP 5011		ATH 31+	
			AMD 1	AMD 4	AMD 1	AMD 4
Ultimate pressure*		mbar	10^{-6}	10^{-6}	10^{-8} **	10^{-8} **
Pumping speed < 10^{-2} mbar*	N_2	l/s	7.5	7.5	30	30
	He	l/s	4	4	20	20
	H_2	l/s	3	3	14	14
Primary module pumping speed		m^3/h	1	4	1	4
Exhaust pressure		mbar	Atmosphere	Atmosphere	Atmosphere	Atmosphere
Start-up time		min	2	2	2	2
Cooling system			Air	Air	Air	Air
Maximum inlet pressure		mbar	5	5	0.5	0.5
Maximum ambient temperature		°C	0 to 40	0 to 40	0 to 40	0 to 40
Maximum power consumption		VA	< 160	< 310	< 160	< 310
Inlet flange			DN 63 ISO-K	DN 63 ISO-K	DN 63 ISO-K	DN 63 ISO-K
Weight		kg (lb)	16 (34)	26 (56)	16 (34)	26 (56)
Dimensions mm (inches)		L	385 (15.2)	385 (15.2)	385 (15.2)	385 (15.2)
		W	305 (12)	410 (16.2)	305 (12)	410 (16.2)
		H	265 (10.4)	265 (10.4)	240 (9.5)	240 (9.5)

** Pneurop measurement*
*** Ultimate pressure with ISO-K flange. For lower ultimate pressure please consult us.*

Roots幫浦 & RP幫浦抽氣系統–知識Q&A

Alcatel Drytel 1025 pumping system Specifications :

ALCATEL Drytel 1025 Oil Free Pumping Station
-Ultimate pressure：10^{-6} mbar
-Pumping speed：**7.5 l/s**
-Primary module pumping speed：1 **m^3 / h**
-Exhaust pressure : Atm.
-Maximum inlet pressure : 5 mbar
-Cooling system：Air
-Inlet flange：DN 63 ISO-KF
-110V, 60Hz

小型真空抽氣系統高真空幫浦**

Root’s pump(魯式幫浦)：

又稱Root’s blower 或 Mechanical booster

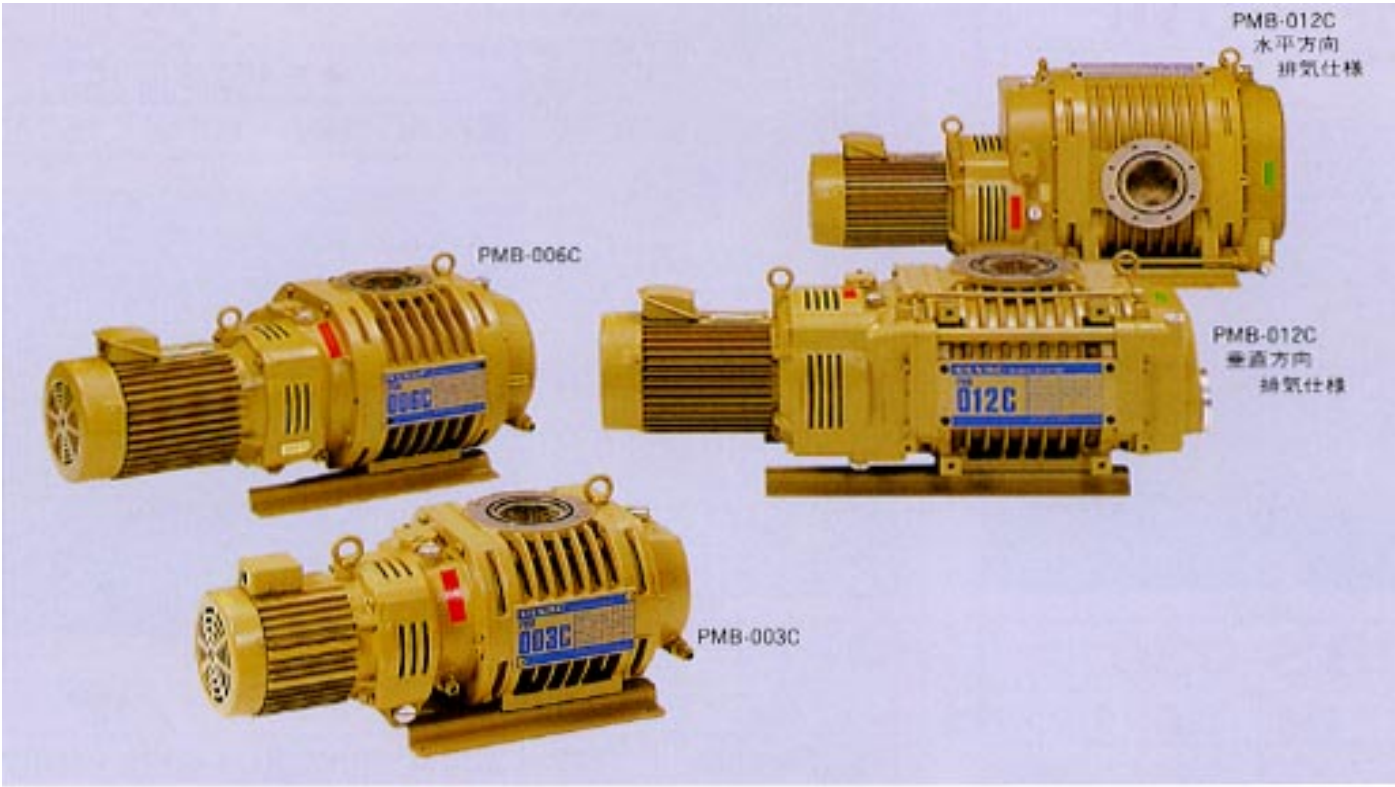

Root’s pump(魯式幫浦)：

又稱Root’s blower 或 Mechanical booster

小型真空抽氣系統高真空幫浦**

Root’s pump(魯式幫浦)：

又稱Root’s blower 或 Mechanical booster

1.壓力範圍：50—10^{-4} torr
2.抽氣速率大小：200—100,000 m^3/h
3.用途：與老達利幫浦，旋轉柱塞幫浦，水封式幫浦等組合使用，可將工作範圍延伸至中真空甚或高真空區域範圍。

Root’s pump(魯式幫浦)：

又稱Root’s blower 或 Mechanical booster

4.結構剖面圖：主要機件爲花生形狀(橫截面)的兩個轉子與控制轉子的齒輪箱。

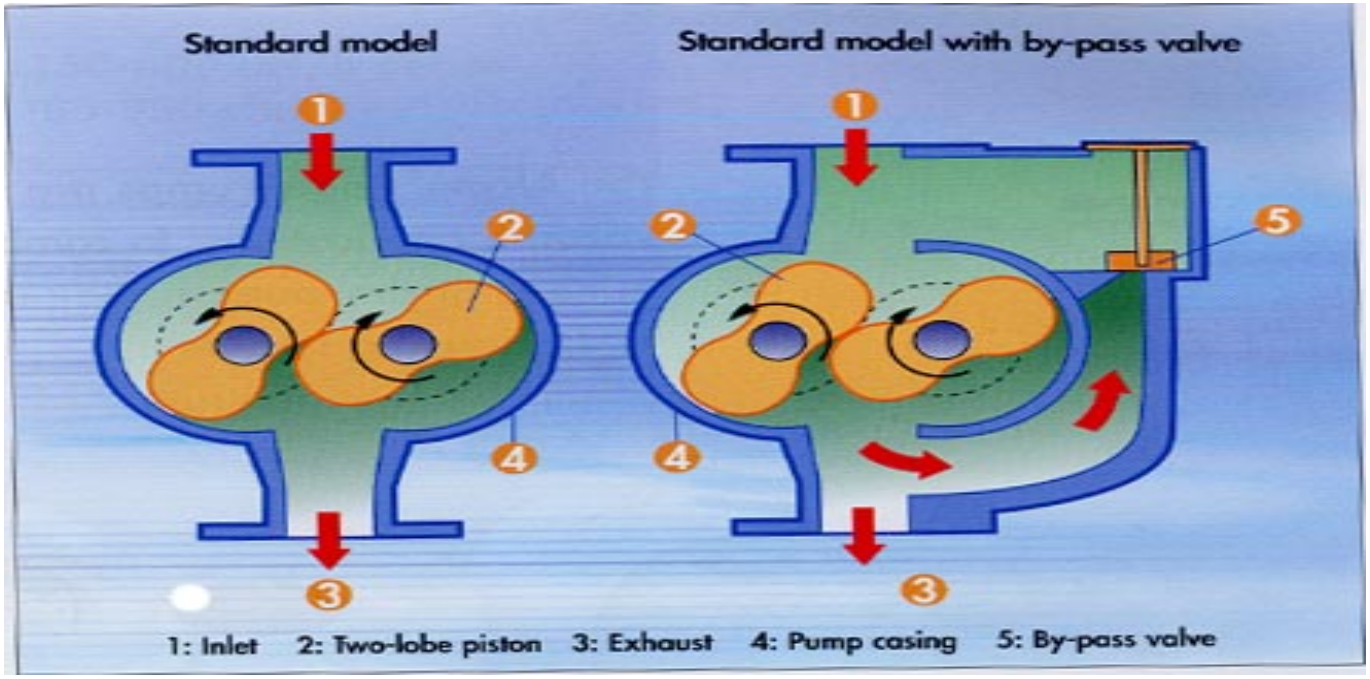

Root’s pump(魯式幫浦)：

又稱Root’s blower 或 Mechanical booster

5.原理：(A)進氣→(B)隔絕→(C)壓縮→(D)排氣。

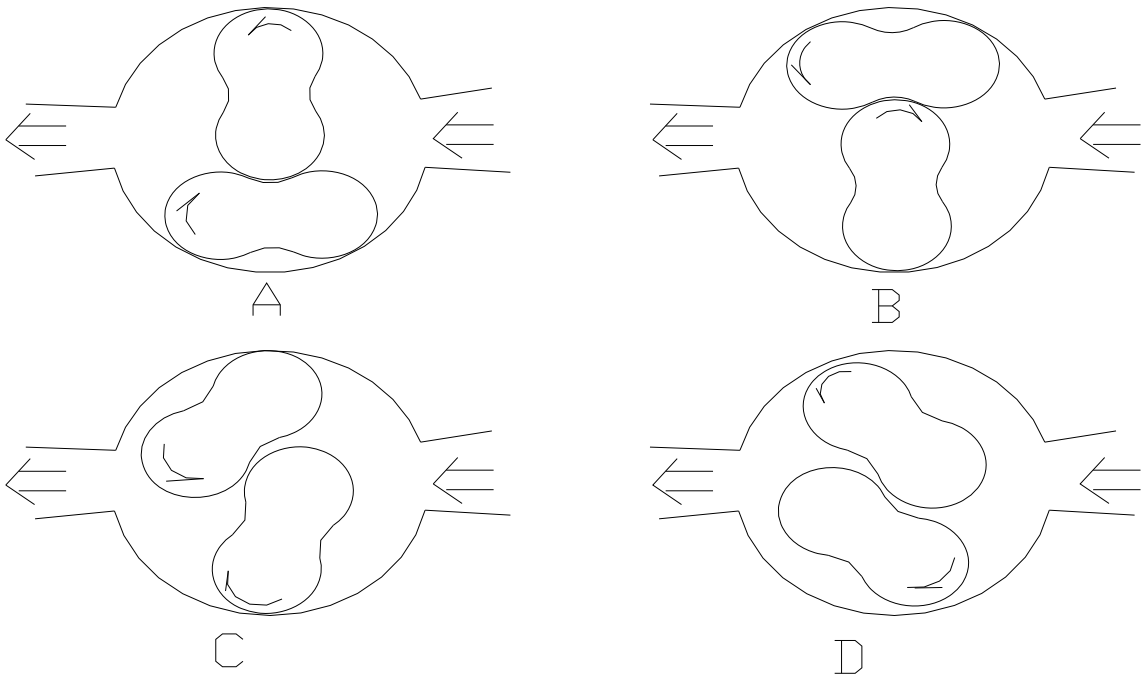

Compact Dry Pumping systems

According to your requirements, it may include :

- an Alcatel MDP 5011 molecular drag pump (7.5 l/s) or a compact ATH 31+ hybrid turbo pump (30 l/s).
- a 1 m^3/h or a 4 m^3/h dry roughing pump, with a 10,000 hour maintenance interval.

OPEN Concept

HIGH VACUUM PUMPS

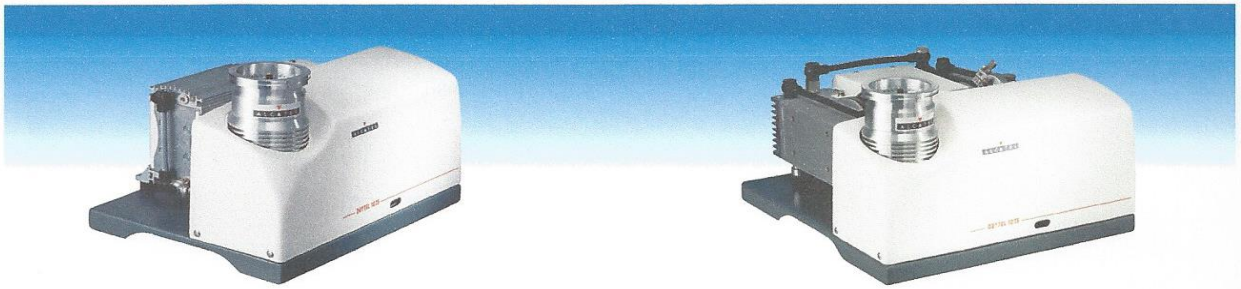

Drytel 1025 with MDP 5011 & AMD1

Drytel 1025 with MDP 5011 & AMD4

Drytel 1025 with ATH 31 + & AMD1

Drytel 1025 with ATH 31 + & AMD4

Compact Dry Pumping systems

BOC EDWARDS

優惠價
實施中

Edwards T-Station 75
Turbopumping Station

Edwards new low cost and compact Turbopumping station with special prices

(優惠促銷價實施中)

End OF August 2013

請麻煩您來電洽詢，謝謝!!!

RVP & Turbo pumping system–知識Q&A

Dimensions

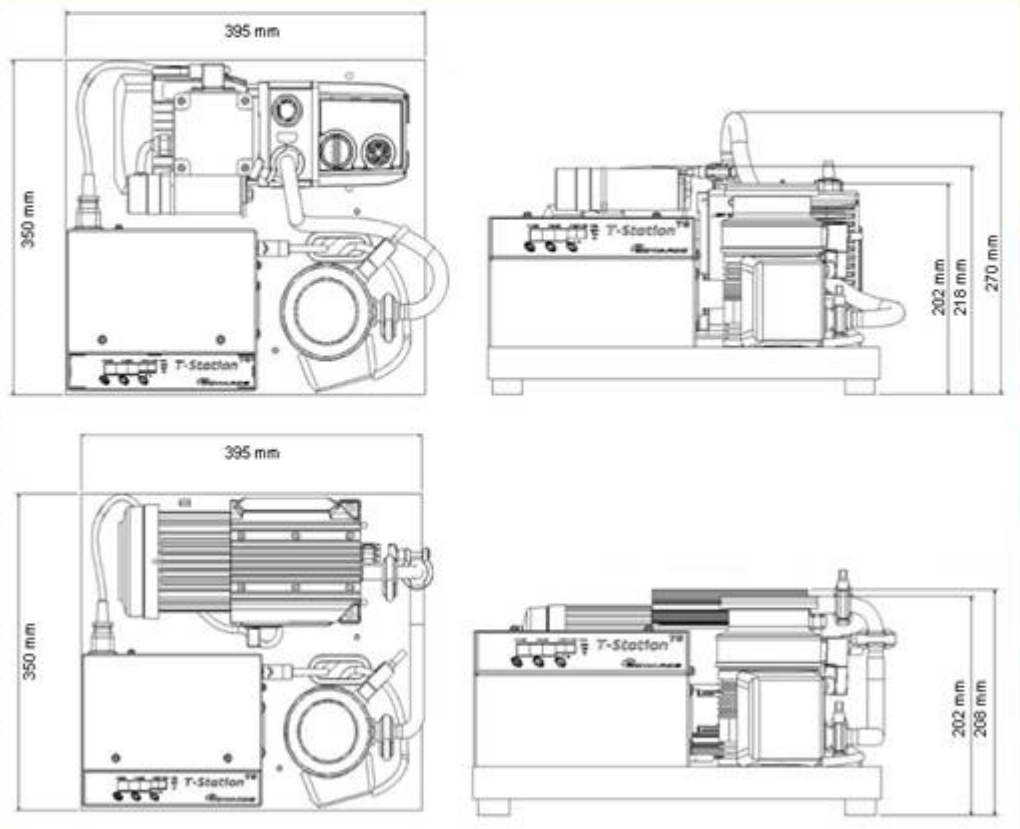

RVP & Turbo pumping system–知識Q&A

Technical Data

- Pumping speed for N^2
- NW40 :42 l/s
- ISO/CF63 :61 l/s
- Compression ratio for : N^2 >1 x 10^{11}
- Backing pump speed @50Hz
- E2M1.5 (TS75W) :1.6 m^3/hr
- XDD1 (TS75D) :1.2 m^3/hr
- Ultimate Pressulre :<5 x 10^8 mbar
- Inlet flange : NW40, ISO63 or CF63

RVP & Turbo pumping system–知識Q&A

Technical Data

- Exhaust flange
- E2M1.5 (TS75W) :11mm OD nozzle or 3/8” BSP
- XDD1 (TS75D) : Fitted silencer or 1/8” BSP
- Mass
- E2M1.5 system (TS75W) : 21 kg max
- XDD1 system (TS75D) : 17kg max
- Noise level :56 dB(A)
- Leak tightness :<1 X 10^{-6} mbar l/s
- Operating temperature range : 12 to 40 ºC

Thank you for your attention

ANY QUESTION ?

中英友科技有限公司
安百立科技有限公司
http://www.ptpump.com.tw